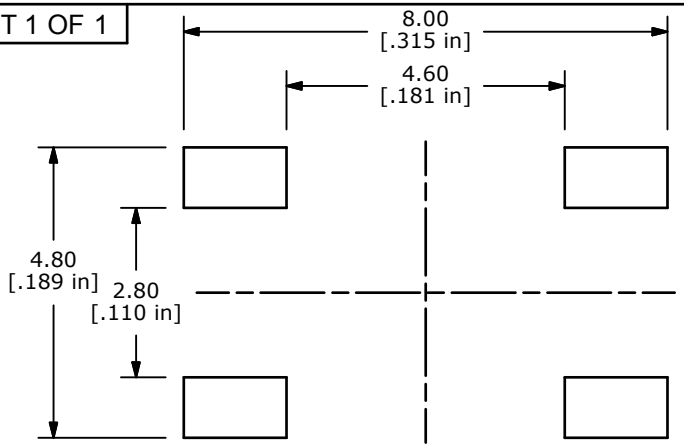

P.C. LAYOUUT

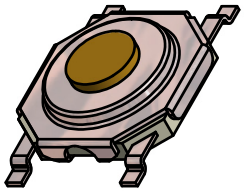

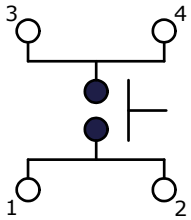

CIRCUIT: SPST

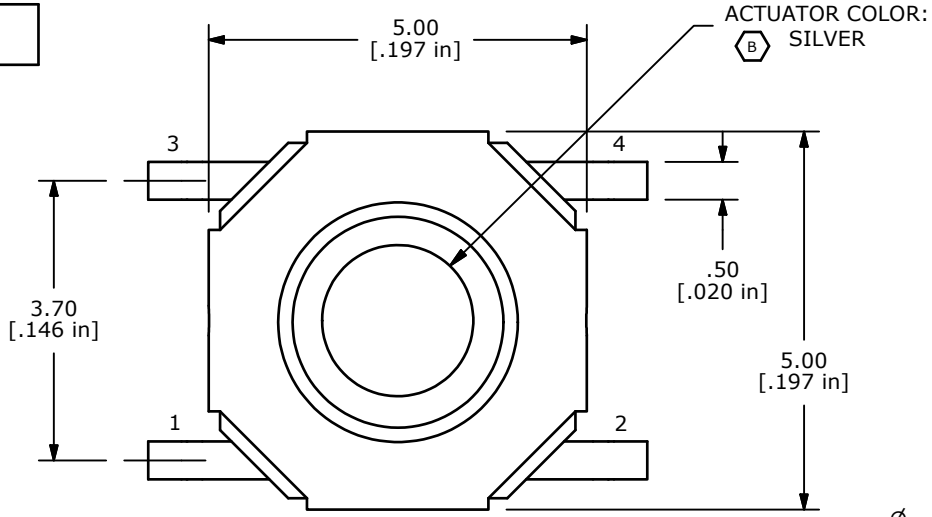

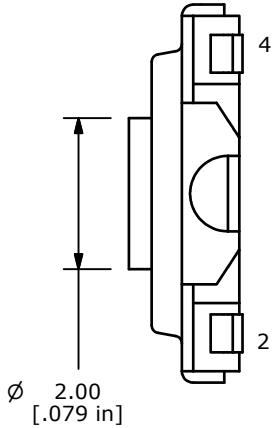

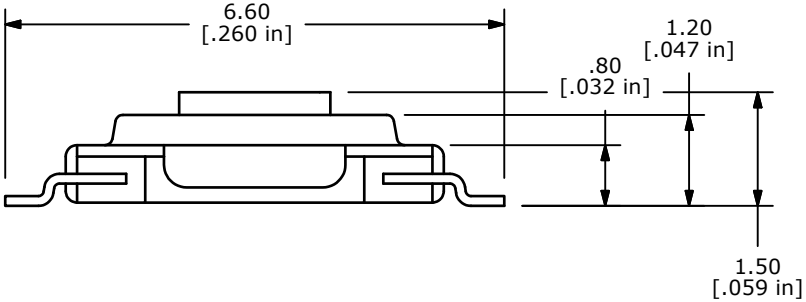

NOTES:
1. ALL DIMENSIONS IN MM
2. GENERAL TOLERANCE: X.X=±0.4
   X.XX=±0.25
3. TERM. NOS. FOR REFERENCE ONLY.
4. RATING: 12VDC @50 MILLI-AMPS
▲ 5. OPERATING FORCE: 320 ± 100 gms
6. TRAVEL: 0.25mm +0.1/-0.2
7. MECHANICAL/ELECTRICAL LIFE 10,000 CYCLES MIN.
▲ 8. CONTACT MATERIAL: SILVER
9. CONTACT RESISTANCE: 500 m Ohms max.
▲10. PACKAGE: TAPE AND REEL, 4000 PER REEL
11▲ DENOTES CRITICAL PARAMETER
12. 2002/95/EC (ROHS) COMPLIANT

REV	PCR NO	DESCRIPTION	DATE	BY
B	21632	ADDED ACTUATOR COLOR	10/15/14	AS
A	20834	New Release	10/18/12	rc

THE INFORMATION CONTAINED IN THIS DOCUMENT IS PROPRIETARY TO E-SWITCH AND IS NOT TO BE COPIED OR TRANSFERRED

E-SWITCH™

TITLE TL3342F320QG

SCALE	DATE	DR	DWG	REV
8:1	10/18/2012	rc	P010601	B