NOTES:
1. MATERIALS AND FINISHES:
   BODY - BeCu, GOLD PLATING, .000030 [0.8] THICK OVER NICKEL
   CONTACT - BeCu, GOLD PLATING, .000030 [0.8] THICK OVER NICKEL
   INSULATOR - PTFE
2. ELECTRICAL:
   A. IMPEDANCE: 50 OHM
   B. FREQUENCY RANGE: DC - 26.5 GHz
   C. VSWR(RETURN LOSS): 1.2 (20.8 dB), MAX. DC-10GHz
   1.4 (15.6 dB), MAX. 10-18GHz
   1.5 (14 dB), MAX. 18-26.5GHz
   D. DIELECTRIC WITHSTANDING VOLTAGE: 500 VRMS, MIN.
3. PHYSICAL:
   A. DURABILTIY: 100 CYCLES MIN.
   B. ENGAGEMENT FORCE: 15 LB [67 N] MAX
   C. DISINGAGEMENT FORCE: 2 LB [9 N] MIN
   E. TEMERATURE RANGE: -65° C TO 165° C
4. PACKAGING:
   A. QUANTITY: SINGLE PACK
   B. MARKING: AMPHENOL, SMP-FSBA-131, DATE CODE

THIRD ANGLE PROJ.

REVISIONS

REV	DESCRIPTION	DATE	ECO	APPR
A	RELEASE TO MFG	6/25/09	47636	TRC

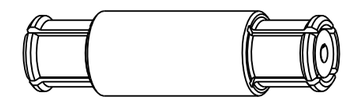

SCALE 4.000

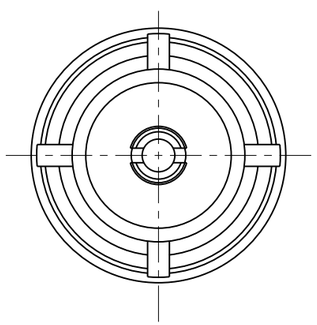

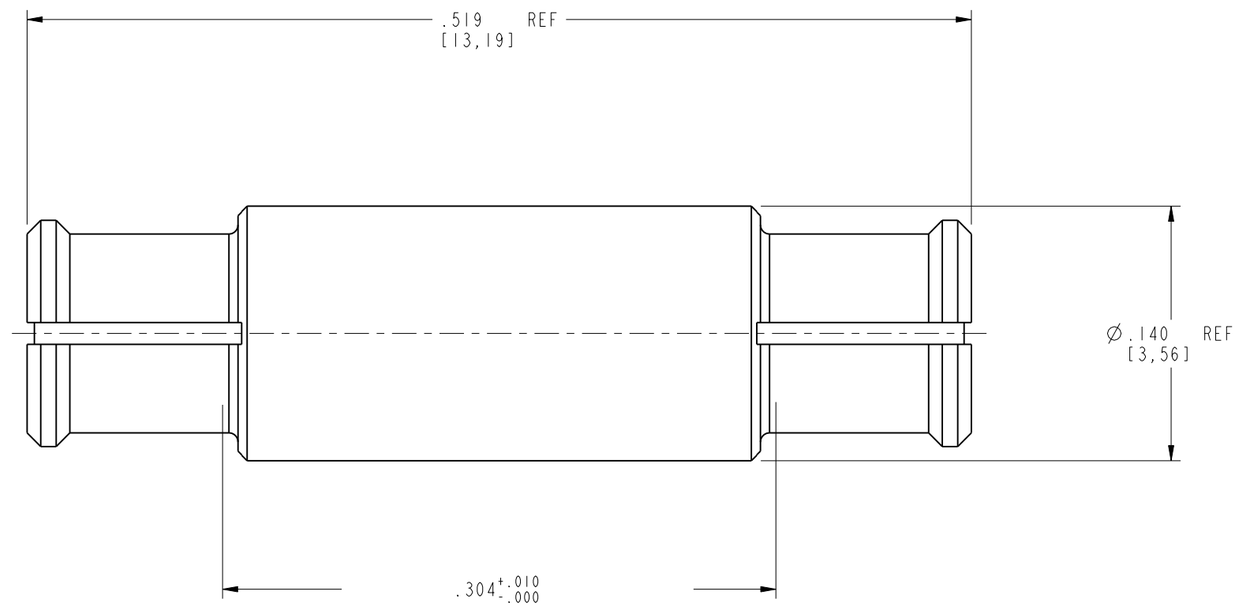

REQUIRED JACK TO JACK SPACING
FOR BLIND MATE APPLICATIONS

CUSTOMER OUTLINE DRAWING

ALL OTHER SHEETS ARE FOR INTERNAL USE ONLY

UNLESS OTHERWISE SPECIFIED, DIMENSIONS ARE IN METRIC AND TOLERANCES ARE:

<0.5mm	0.5 - 6mm	6 - 30mm	30 - 120mm	ANGLES
± 0.05mm	±0.1mm	±0.2mm	± 0.3mm	±1°

NOTICE - These drawings, specifications, or other data (1) are, and remain the property of Amphenol corp. (2) must be returned upon requiest; and (3) arre confidential and not to be disclosed to any person other than those to whom they are given by Amphenol Corp. the funishing of these drawings, specifications, or other data by Amphenol Corp., or to any other person to anyone for any purpose is not to be regarded by implicatioin or otherwise in any manner licensing, granting rights to permitting such holder or any other sperson to manufacture, use or sell any product, process or design, patented or otherwsie, that may in any way be related to or disclosed by said drawings, specifications, or other data.

MATERIAL
-

REFERENCE
EAR # 1919 AND 615X-1718

CONFIGURATION LEVEL: Prototype

FINISH

DRAWN K.LI	DATE 15-May-09	
ENGINEER T. COVERSTONE	DATE 15-May-09	
APPROVED K. CAPOZZI	DATE 6/25/09	
CAD FILE Root Folder/SMP/SMP-FSBA-131		

TITLE
ASSEMBLY
SMP,M-M

SCALE: 12.0:1.0 SHEET 2 OF 2

DWG SIZE B REV A

Amphenol RF
Danbury CT USA, Tainan, Taiwan, Shenzhen, China
www.amphenolrf.com

DRAWING NO. SMP-FSBA-131
ITEM NO. SMP-FSBA-131
PART NO. SMP-FSBA-131