THIS DRAWING IS UNPUBLISHED. RELEASED FOR PUBLICATION 2003
© COPYRIGHT 2003 TYCO ELECTRONICS CORPORATION ALL RIGHTS RESERVED.

LOC	DIST
A1	–

REVISIONS

P	LTR	DESCRIPTION	DATE	DWN	APVD
	G3	ECR-10-020549	06OCT2010	GS	KR
	H	ECR-11-006042	23MAR2011	PT	GM
	H1	ECR-12-019433	08NOV2012	SH	GM

-	-	-	-	-	-	-
1452995	LIGHTGREY	CHASSIS	0-1719321-2	0-1719938-1	A	15.70
1452931	BLACK	ENGINE	0-1719321-4	0-1719938-2	B	13.10
PN	CONTACT HOUSING COLOUR	APPLICATION	FITS TO PRE-SERIES HEADER	FITS TO SERIAL PRODUCTION HEADER	CODING	X

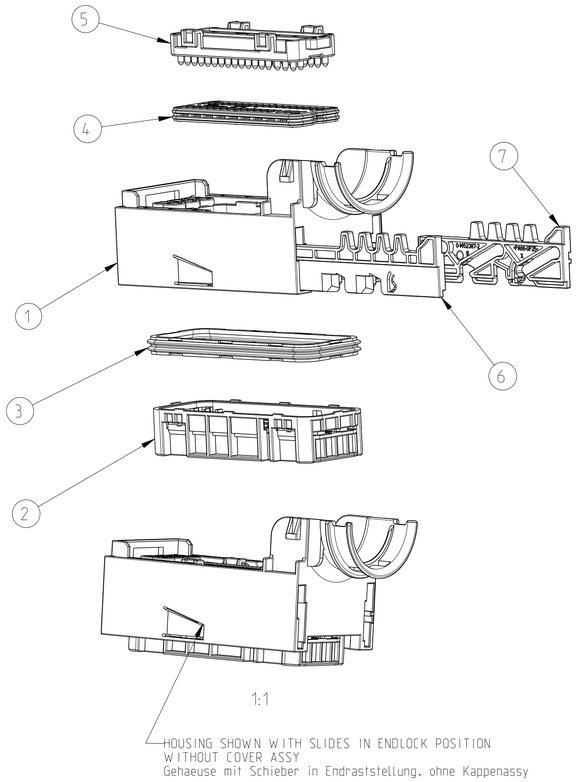

FOR WIRE WITH OUTER DIAMETER 1.9-2.4MM THE INSULATION CRIMP DIMENSIONS ARE BIGGER AS THE DIMENSIONS OF THE TERMINAL BOX.
DUE TO THIS THERE IS NO POLARISATION DURING INSERTION OF THE TERMINAL IN THE FAMILY SEAL COVER.
Fuer Kabel mit Aussendurchmesser 1.9-2.4mm sind die Isolationscrimpabmessungen groesser als die Abmessungen des Buchsenkastens.
Daher gibt es waehrend der Kontaktbestueckung in dem Cover for family seal keine Polarisation.

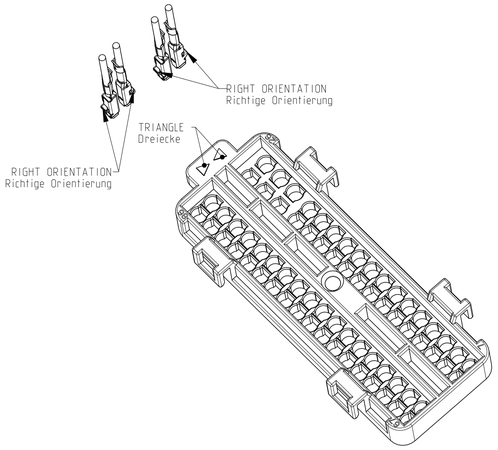

THE TRIANGLES ON THE FAMILY SEAL COVER SHOW THE RIGHT ORIENTATION OF THE TERMINALS DURING INSERTION IN THE CONNECTOR HOUSING.
Die Dreiecke auf dem Cover for family seal zeigen die richtige Orientierung der Kontakte beim Bestuecken

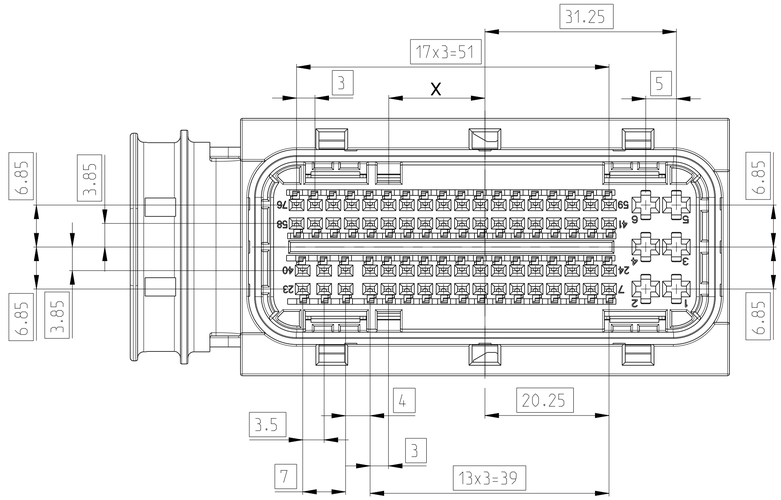

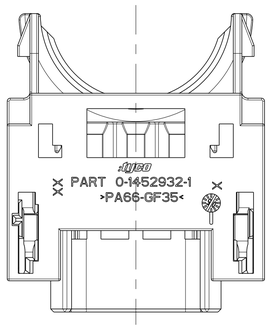

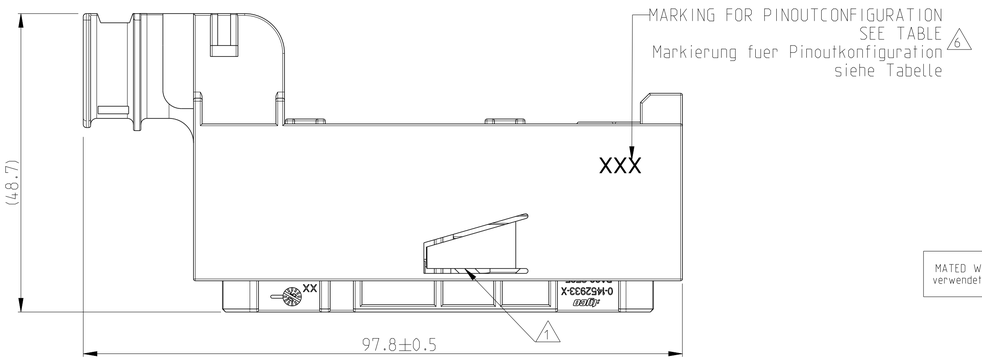

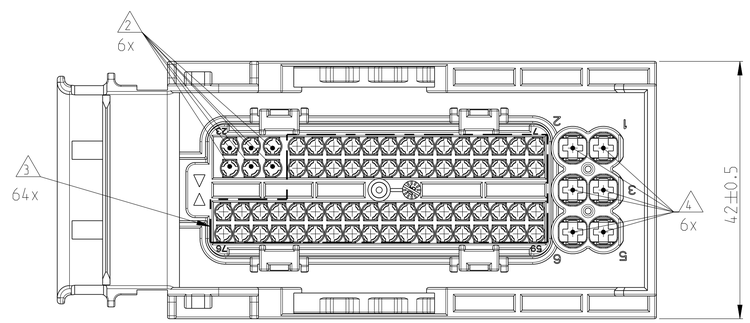

NOTES:
Bemerkungen:

1. ASSY DELIVERED WITH SLIDES IN ENDLOCK POSITION
   Anlieferungszustand: Schieber in Endraststellung
2. 6 CAVITIES FOR WIRES WITH ODØ 1.90mm TO 2.40mm
   6 Kammern fuer Drahtdurchmesser Ø 1.90mm bis 2.40mm
3. 64 CAVITIES FOR WIRES WITH ODØ 1.90mm TO 2.25mm
   64 Kammern fuer Drahtdurchmesser Ø 1.90mm bis 2.25mm
4. 6 CAVITIES FOR WIRES WITH SINGLE WIRE SEAL UP TO ODØ 3.0mm (SEE TABLE)
   6 Kammern fuer Drahtdurchmesser mit EDS bis Ø 3.0mm (siehe Tabelle)
5. CONVERSION KIT NECESSARY: WIRES ODØ 1.40mm TO 1.90mm
   Umbausatz notwendig: Drahtdurchmesser Ø 1.40mm bis 1.90mm
6. COUNTERPART INTERFACE SEE TE-SPECIFICATION 114-18764
   Passende Stiftwanne siehe TE-Spezifikation 114-18764

TERMINALS TE PN TE Kontakte PN	FINISH Oberflaeche	WIRE SIZE (mm²) Drahtquerschnitt (mm²)		SINGLE WIRE SEAL Einzelleiterdichtung	NOTES Bemerkungen
0-1452503-3	SILVER PLATED	1.0 - 1.5			
~~0-1391897-3~~		~~0.5 - 0.75~~	OPTIONAL SEE NOTE Optional siehe Bemerkung 5		
0-1452503-2	GOLD PLATED	1.0 - 1.5			
~~0-1391897-2~~		~~0.5 - 0.75~~	OPTIONAL SEE NOTE Optional siehe Bemerkung 5		
0-1452503-1	PRE-TIN	1.0 - 1.5			
~~0-1391897-1~~		~~0.5 - 0.75~~	OPTIONAL SEE NOTE Optional siehe Bemerkung 5		
1-968857-1	PRE-TIN	>1.0 - 2.5	4	0-828905-1 (FOR ISOØ 2.2-3.0)	BLINDPLUG Blindstopfen PN 828922
1-968855-1		0.5 - 1.0	4	0-828904-1 (FOR ISOØ 1.2-2.1)	
1-968882-1		0.35	4	0-828904-1 (FOR ISOØ 1.2-2.1)	
1-968857-3	SILVER PLATED	>1.0 - 2.5	4	0-828905-1 (FOR ISOØ 2.2-3.0)	BLINDPLUG Blindstopfen PN 828922
1-968855-3		0.5 - 1.0	4	0-828904-1 (FOR ISOØ 1.2-2.1)	
1-968882-3		0.35	4	0-828904-1 (FOR ISOØ 1.2-2.1)	

MATED WITH verwendet mit	0-1452990-1 0-1452997-1 0-1452408-1 0-1719000-1	0-1452990-1 0-1452997-1 0-1452408-1 0-1719000-1				
	1x	1x	PA66-GF25	96 POS. SLIDE RIGHT -	BLACK -	7
	1x	1x	PA66-GF25	96 POS. SLIDE LEFT -	BLACK -	6
	1x	1x	PBT-GF20	76 POS. COVER FOR FAMILY SEAL	BLACK	5
	1x	1x	Elastosil	76 POS. FAMILY SEAL -	WHITE -	4
	1x	1x	Elastosil	96 POS. PERIPHERAL SEAL	WHITE	3
	1x		PA66-GF35	76 POS. CONTACT HOUSING CODING A	LIGHTGREY -	2
		1x	PA66-GF35	76 POS. CONTACT HOUSING CODING B	BLACK -	2
	1x	1x	PA66-GF35	76 POS. FEMALE HOUSING -	BLACK -	1
	1452995 CODING A	1452931 CODING B	MATERIAL	DESCRIPTION	COLOUR	ITEM NO
	ASSY-NO	ASSY-NO				
	73.65	73.65	WEIGHT OF EACH ASSY NO [g]			
	QTY REQD PER ASSY	QTY REQD PER ASSY	PARTS LIST			

THIS DRAWING IS A CONTROLLED DOCUMENT.

DIMENSIONS: mm

TOLERANCES UNLESS OTHERWISE SPECIFIED:
0 PLC ±
1 PLC ±
2 PLC ±
3 PLC ±
4 PLC ±
ANGLES ±1°

MATERIAL - -
FINISH - -

DWN G.PUCKEL	16DEC2004	
CHK K.ROTH	16DEC2004	
APVD G.MUMPER	16DEC2004	
PRODUCT SPEC 108-94072		
APPLICATION SPEC 114-18822		
WEIGHT –		

TE Connectivity

NAME 76POS. CONNECTOR ASSEMBLY 70 x MCON1.2 AND 6 x MCP 2.8mm –

SIZE	CAGE CODE	DRAWING NO	RESTRICTED TO
A1	00779	C-1452931	–

CUSTOMER DRAWING | SCALE 2:1 | SHEET 1 OF 2 | REV H1

4805 (3/11)

THIS DRAWING IS UNPUBLISHED. RELEASED FOR PUBLICATION 2003
© COPYRIGHT 2003 TYCO ELECTRONICS CORPORATION ALL RIGHTS RESERVED.

LOC	DIST
A1	–

REVISIONS

P	LTR	DESCRIPTION	DATE	DWN	APVD
	-	SEE SHEET 1	-	-	-

| | | | | 1 | 2 | 3 | 4 | 5 | 6 | 7 | 8 | 9 | 10 | 11 | 12 | 13 | 14 | 15 | 16 | 17 | 18 | 19 | 20 | 21 | 22 | 23 | 24 | 25 | 26 | 27 | 28 | 29 | 30 | 31 | 32 | 33 | 34 | 35 | 36 | 37 | 38 | 39 | 40 | 41 | 42 | 43 | 44 | 45 | 46 | 47 | 48 | 49 | 50 | 51 | 52 | 53 | 54 | 55 | 56 | 57 | 58 | 59 | 60 | 61 | 62 | 63 | 64 | 65 | 66 | 67 | 68 | 69 | 70 | 71 | 72 | 73 | 74 | 75 | 76 |
|---|---|---|---|---|---