THIS DRAWING IS UNPUBLISHED. RELEASED FOR PUBLICATION 20
© COPYRIGHT 20 BY TYCO ELECTRONICS CORPORATION. ALL RIGHTS RESERVED.

LOC	DIST
AP	-

REVISIONS

P	LTR	DESCRIPTION	DATE	DWN	APVD
	A3	OBSOLETE -4 ECO-09-005893	10AUG2009	NCL	SHA
	B	REVISED DESIGN ECO-10-001844	02FEB2010	NCL	SHA

CAD Pro/E WILDFIRE 2.0 DO NOT REVISE EXCEPT BY CAD

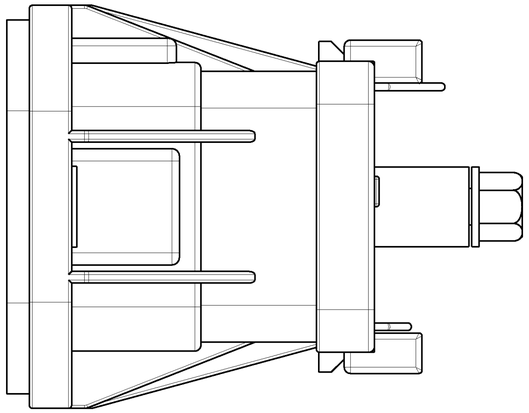

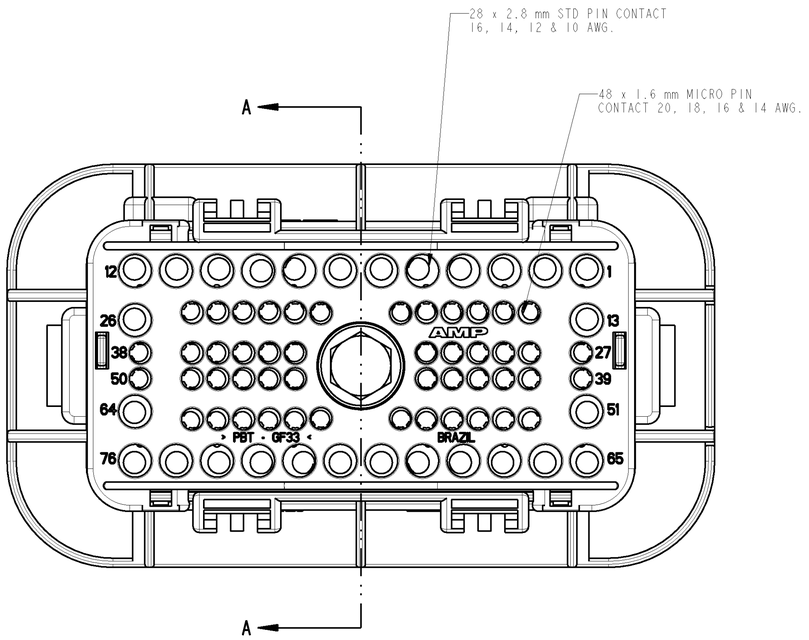

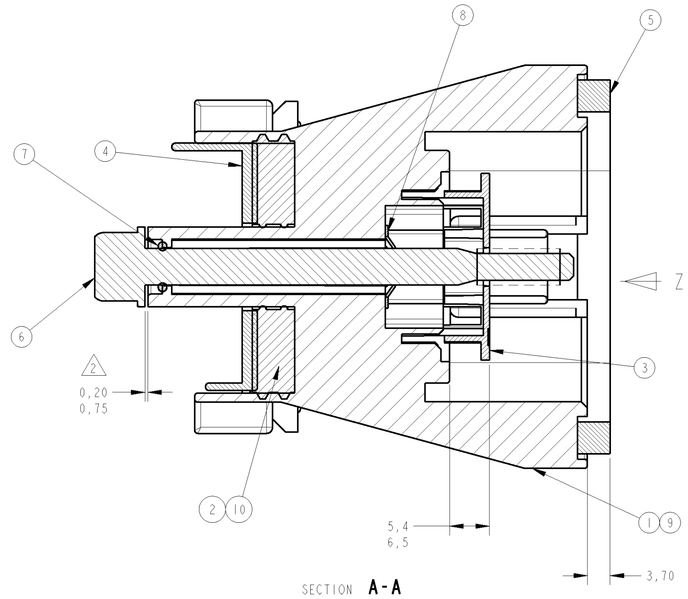

SECTION **A-A**

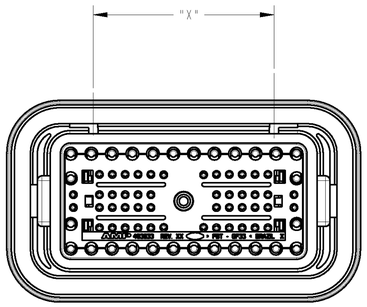

SCALE 1:1

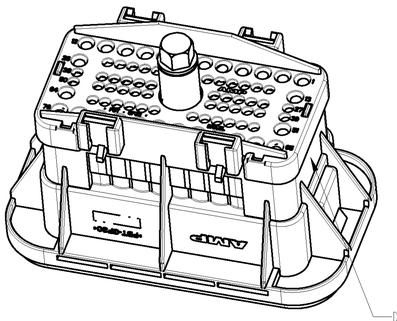

PERSPECTIVE VIEW
SCALE 1:1

DATE CODE
XXXXXXX-X / XXXXXX

- I.D. NO.
- COMPONENT CHANGE
- SHIFT
- DAY
- MONTH
- YEAR

1 - PARA ASSEGURAR A COMPATIBILIDADE FUNCIONAL ENTRE AS PEÇAS,ELAS DEVEM SER FERRAMENTADAS JUNTAS E MANUFATURADAS POR UM MESMO PROVEDOR.

2 - PARAFUSO ITEM 6, DEVE GIRAR LIVREMENTE APÓS INSTALAÇÃO DA TRAVA ITEM 8.

3 - POLARIZAÇÃO "KEY A"

4 - POLARIZAÇÃO "KEY B"

5 - 1599186 (HSG ASSY 76 POSN SOCKET CONTACT) DEVE MONTAR COM 1599185 (HSG ASSY 76 POSN PIN CONTACT) APROPRIADAMENTE.

6 - A TRAVA ITEM 8 DEVE SUPORTAR 2,224 KN EMPURRANDO O PARAFUSO NO SENTIDO Z

7 - O CONECTOR DEVE SER TOTALMENTE ENCAIXADO USANDO TORQUE DE 4,8 ± 0,8 Nm NO PARAFUSO.

8 - OS CONECTORES SELADOS DEVEM ATENDER AO TESTE DE VEDAÇÃO CONFORME IEC-60529-IPX4.

9 - PARA EXTRAÇÃO DO TERMINAL UTILIZAR FERRAMENTA CONFORME TE SPEC 411-37031

10 -NAO USAR FIO DE 20 AWG ISOLAÇÃO FINA.

11 - SOMENTE PROTOTIPO

1 - TO ENSURE FUNCTIONAL COMPATIBILITY BETWEEN PARTS THEY MUST BE TOOLED TOGETHER AND MOLDED BY A SINGLE SOURCE.

2 - BOLT ITEM 6, MUST ROTATE FREELY AFTER INSTALLATION OF NUT, ITEM 8.

3 - POLARIZATION "KEY A"

4 - POLARIZATION "KEY B"

5 - 1599186 (HSG ASSY 76 POSN SOCKET CONTACT) MUST MATE PROPERLY WITH 1599185 (HSG ASSY 76 POSN PIN CONTACT).

6 - RETAINER M6,0 (ITEM 8) MUST WITHSTAND A PUSH OUT FORCE ON THE BOLT OF 2.224 KN IN THE DIRECTION OF ARROW "Z"

7 - PARTS MUST FULLY MATE USING 4.8 ± 0.8 Nm TORQUE ON BOLT.

8 - SEALED CONNECTORS SHALL ATTEND SEAL PERFORMANCE TEST ACCORDING TO IEC 60529 IPX4.

9 - FOR TERMINAL EXTRACTION TOOL SEE TE SPEC 411-37031

10-DO NOT USE 20 AWG THIN WALL INSULATION WIRE.

11 - PROTOTYPE ONLY

OBSOLETE

REQ.PER ASSY 11-4	-3	-2	-1	ITEM	DESCRIPTION	MATERIAL	FINISH
1	1	-	-	10	GROMMET 76 POSN.	SILICONE ELASTOMER	MARROM/BROWN
1	1	1	-	9	HSG. 76 POSN. PIN CONTACT	PBT 33% GF	PRETO/BLACK
1	1	1	1	8	NUT 6 mm, STAMPED	ACO SAE 1050-1070	——
1	1	1	1	7	O´RING	SILICONE ELASTOMER	——
1	1	1	1	6	BOLT 6 mm	AÇO SAE 1015	——
1	1	1	1	5	OUTER PERIPHERAL SEAL	NEOPRENE EPDM E SBR	PRETO/BLACK
1	1	1	1	4	COVER WIRE CONNECTOR	PBT 33% GF	NATURAL
1	1	1	1	3	SPACER TPA 76 POSN. PIN CONTACT	PBT 33% GF	VERMELHO/RED
-	-	1	1	2	GROMMET 76 POSN PIN CONTACT	SILICONE ELASTOMER	AZUL/BLUE
-	-	-	1	1	HSG. 76 POSN. PIN CONTACT	PBT 33% GF	BRANCO/WHITE

4	B	71,5	1599185-2
4	B	71,5	1599185-2
4	B	71,5	1599185-2
3	A	59,00	1599185-1
KEY	"X"	PART NUMBER
POLARIZATION		

TOTAL OPEN HOLES	PART NUMBER
76	1599185-4
76	1599185-3
76	1599185-2
76	1599185-1

76 75 74 73 72 71 70 69 68 67 66 65 64 63 62 61 60 59 58 57 56 55 54 53 52 51 50 49 48 47 46 45 44 43 42 41 40 39 38 37 36 35 34 33 32 31 30 29 28 27 26 25 24 23 22 21 20 19 18 17 16 15 14 13 12 11 10 9 8 7 6 5 4 3 2 1

THIS DRAWING IS A CONFIDENTIAL DOCUMENT FOR TYCO ELECTRONICS CORPORATION. IT IS SUBJECT TO CHANGE AND THE CONTROLLING ENGINEERING ORGANIZATION SHOULD BE CONTACTED FOR THE LATEST REVISION.

DWN	E. LOPES	22APR2004
CHK	P. L. FARIA	22APR2004
APVD	D. A. OLIVEIRA	22APR2004

Tyco Electronics — TYCO ELECTRONICS do Brasil LTDA. São Paulo , Brasil

DIMENSIONS: mm

TOLERANCES UNLESS OTHERWISE SPECIFIED:
0 PLC ±-
1 PLC ±0.3
2 PLC ±0.20
3 PLC ±-
4 PLC ±-
ANGLES ±1°

MATERIAL: SEE TABLE -
FINISH: SEE TABLE -

PRODUCT SPEC -
APPLICATION SPEC -
WEIGHT -

NAME: HOUSING ASSEMBLY, 76 POSN., PIN CONTACT SEALED -

SIZE	CAGE CODE	DRAWING NO	RESTRICTED TO
A1	00779	C-1599185	-

CUSTOMER DRAWING — SCALE 2:1 — SHEET 1 OF 1 — REV B