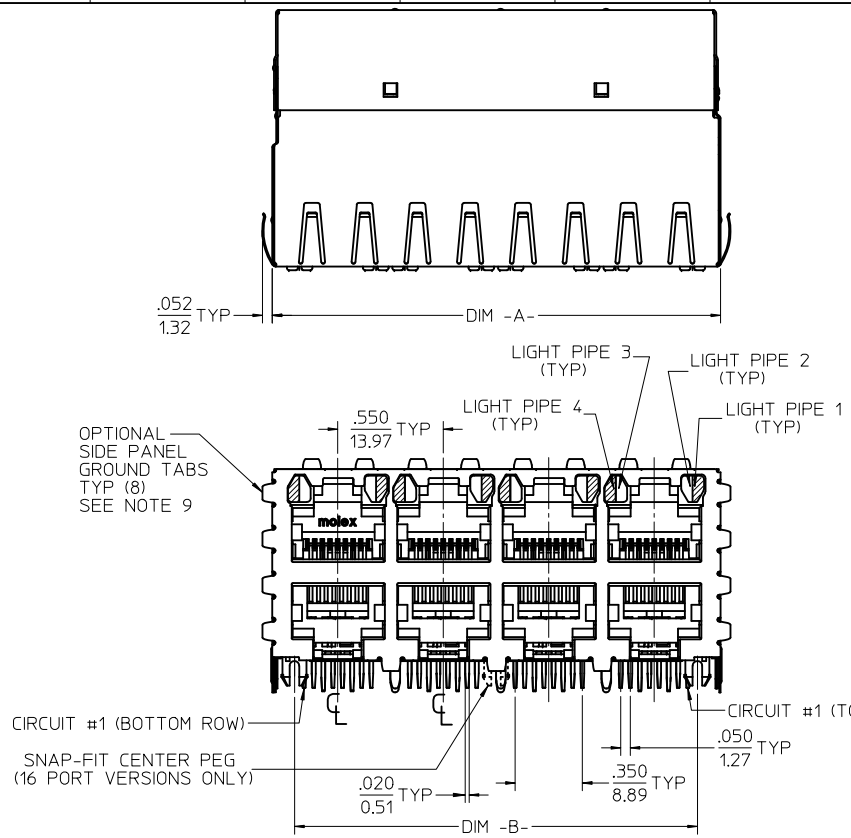

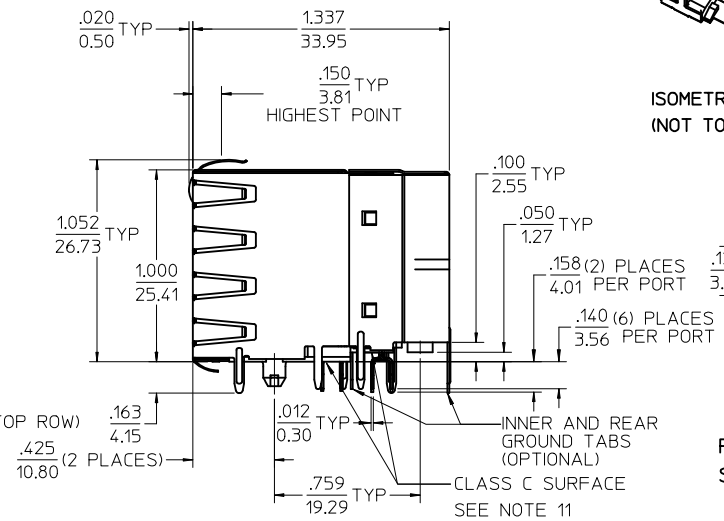

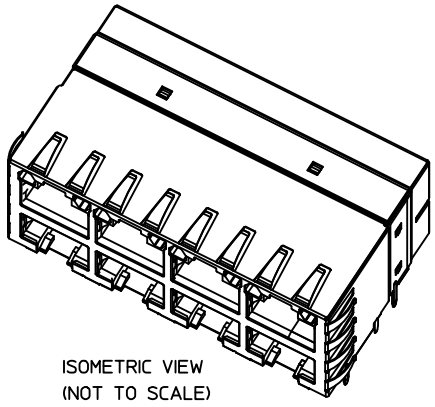

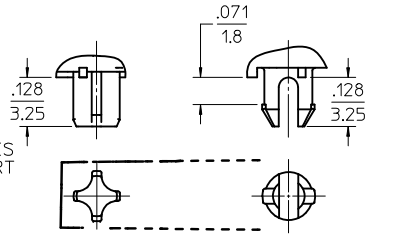

ASSEMBLY MATERIAL NUMBER	NUMBER OF PORTS	PEG STYLE	DIM -A-	DIM -B-	SIDE PANEL GROUND TABS	INNER/REAR GROUND TABS
44170-0001	8 (2 X 4)	SNAP-FIT	2.330/59.18	2.100/53.34	YES	YES
44170-2001	8 (2 X 4)	SNAP-FIT	2.330/59.18	2.100/53.34	NO	YES
44170-3001	8 (2 X 4)	SNAP-FIT	2.330/59.18	2.100/53.34	YES	NO
44170-4001	8 (2 X 4)	SNAP-FIT	2.330/59.18	2.100/53.34	NO	NO
44170-0004	8 (2 X 4)	PRESS-FIT	2.330/59.18	2.100/53.34	YES	YES
44170-2004	8 (2 X 4)	PRESS-FIT	2.330/59.18	2.100/53.34	NO	YES
44170-3004	8 (2 X 4)	PRESS-FIT	2.330/59.18	2.100/53.34	YES	NO
44170-4004	8 (2 X 4)	PRESS-FIT	2.330/59.18	2.100/53.34	NO	NO
44170-0002	12 (2 X 6)	SNAP-FIT	3.430/87.12	3.200/81.28	YES	YES
44170-2002	12 (2 X 6)	SNAP-FIT	3.430/87.12	3.200/81.28	NO	YES
44170-3002	12 (2 X 6)	SNAP-FIT	3.430/87.12	3.200/81.28	YES	NO
44170-4002	12 (2 X 6)	SNAP-FIT	3.430/87.12	3.200/81.28	NO	NO
44170-0005	12 (2 X 6)	PRESS-FIT	3.430/87.12	3.200/81.28	YES	YES
44170-2005	12 (2 X 6)	PRESS-FIT	3.430/87.12	3.200/81.28	NO	YES
44170-3005	12 (2 X 6)	PRESS-FIT	3.430/87.12	3.200/81.28	YES	NO
44170-4005	12 (2 X 6)	PRESS-FIT	3.430/87.12	3.200/81.28	NO	NO
44170-0003	16 (2 X 8)	SNAP-FIT	4.530/115.06	4.300/109.22	YES	YES
44170-2003	16 (2 X 8)	SNAP-FIT	4.530/115.06	4.300/109.22	NO	YES
44170-3003	16 (2 X 8)	SNAP-FIT	4.530/115.06	4.300/109.22	YES	NO
44170-4003	16 (2 X 8)	SNAP-FIT	4.530/115.06	4.300/109.22	NO	NO
44170-0006	16 (2 X 8)	PRESS-FIT	4.530/115.06	4.300/109.22	YES	YES
44170-2006	16 (2 X 8)	PRESS-FIT	4.530/115.06	4.300/109.22	NO	YES
44170-3006	16 (2 X 8)	PRESS-FIT	4.530/115.06	4.300/109.22	YES	NO
44170-4006	16 (2 X 8)	PRESS-FIT	4.530/115.06	4.300/109.22	NO	NO

NOTES:
1) MATERIAL:
HOUSING: POLYESTER(PBT), GLASS FILLED, UL94V-0, COLOR: BLACK
LIGHT PIPES: POLYCARBONATE, UL-94HB, COLOR: CLEAR
TERMINALS: PHOSPHOR BRONZE
SHIELD: BRASS
2) FINISH:
TERMINALS:
SELECT GOLD IN CONTACT AREA: 50 MICROINCHES / 1.27 MICROMETERS MIN.,
SELECT TIN IN PC TAIL AREA: 100 MICROINCHES / 2.54 MICROMETERS MIN.,
WITH OVERALL NICKEL UNDERPLATE: 50 MICROINCHES / 1.27 MICROMETERS MIN.
SHIELD:
100 MICROINCHES / 2.54 MICROMETERS NICKEL OVER 50 MICROINCHES / 1.27 MICROMETERS COPPER UNDERPLATE PCB GROUND TABS DIPPED IN TIN
3) PRODUCT SPECIFICATION AND PROCESSING PARAMETERS: PS-44050-003.
4) PACKAGING SPECIFICATION: CONNECTOR PACKAGED IN THERMOFORMED TRAYS PER PK-44170-003.
5) APPLICATION SPECIFICATION: AS-43860-001
6) CONNECTORS AVAILABLE WITH EITHER SNAP-FIT OR PRESS-FIT PEGS.
7) CONFORMS TO FCC REGULATION PART 68.5 FOR MODULAR JACKS.
8) PCB LAYOUT AND PANEL CUT-OUT SHOWN ON SHEET (2) OF (2).
9) AVAILABLE WITH THE (8) PANEL GROUND TABS REMOVED ON EACH SIDE FOR SIDE TO SIDE STACKABILITY.
10) TERMINAL LENGTHS MAY BE DIFFERENT FROM TERMINAL TO TERMINAL.
11) THIS PART CONFORMS TO CLASS B REQUIREMENTS OF COSMETIC SPECIFICATION PS-45499-002 WITH THE EXCEPTION OF THE SURFACE INDICATED WHICH IS A CLASS C SURFACE.

ADD TOL TO PCB
EC NO: UCP2012-1217 2011/10/18
DRWN:NNGUYEN 2011/10/18
CH'KD:JBELL 2012/02/10
APPR:FSMITH
DESCRIPTION
REV

QUALITY SYMBOLS
E =0
E =0
E =0

GENERAL TOLERANCES (UNLESS SPECIFIED)

	mm	INCH
4 PLACES	± ---	± ---
3 PLACES	± ---	± .010
2 PLACES	± 0.25	± ---
1 PLACE	± ---	± ---
ANGULAR ±1/2°		

DRAFT WHERE APPLICABLE MUST REMAIN WITHIN DIMENSIONS

DIMENSION STYLE: IN/MM
SCALE: 2:1
DESIGN UNITS: INCH
THIRD ANGLE PROJECTION

DRAWN BY: MARGULIS	DATE: 98/11/16	TITLE: STACKED MODULAR JACK WITH LIGHT PIPES CAT 5
CHECKED BY: ROBERTS	DATE: 98/11/16	
APPROVED BY: ROBERTS	DATE: 98/11/16	MOLEX INCORPORATED
MATERIAL NO.: SEE CHART		DOCUMENT NO.: SD-44170-001 — SHEET NO.: 1 OF 2
SIZE: C		

THIS DRAWING CONTAINS INFORMATION THAT IS PROPRIETARY TO MOLEX INCORPORATED AND SHOULD NOT BE USED WITHOUT WRITTEN PERMISSION

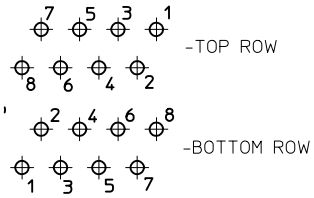

MOLEX TRADITIONAL
PIN LAYOUT (TYP)

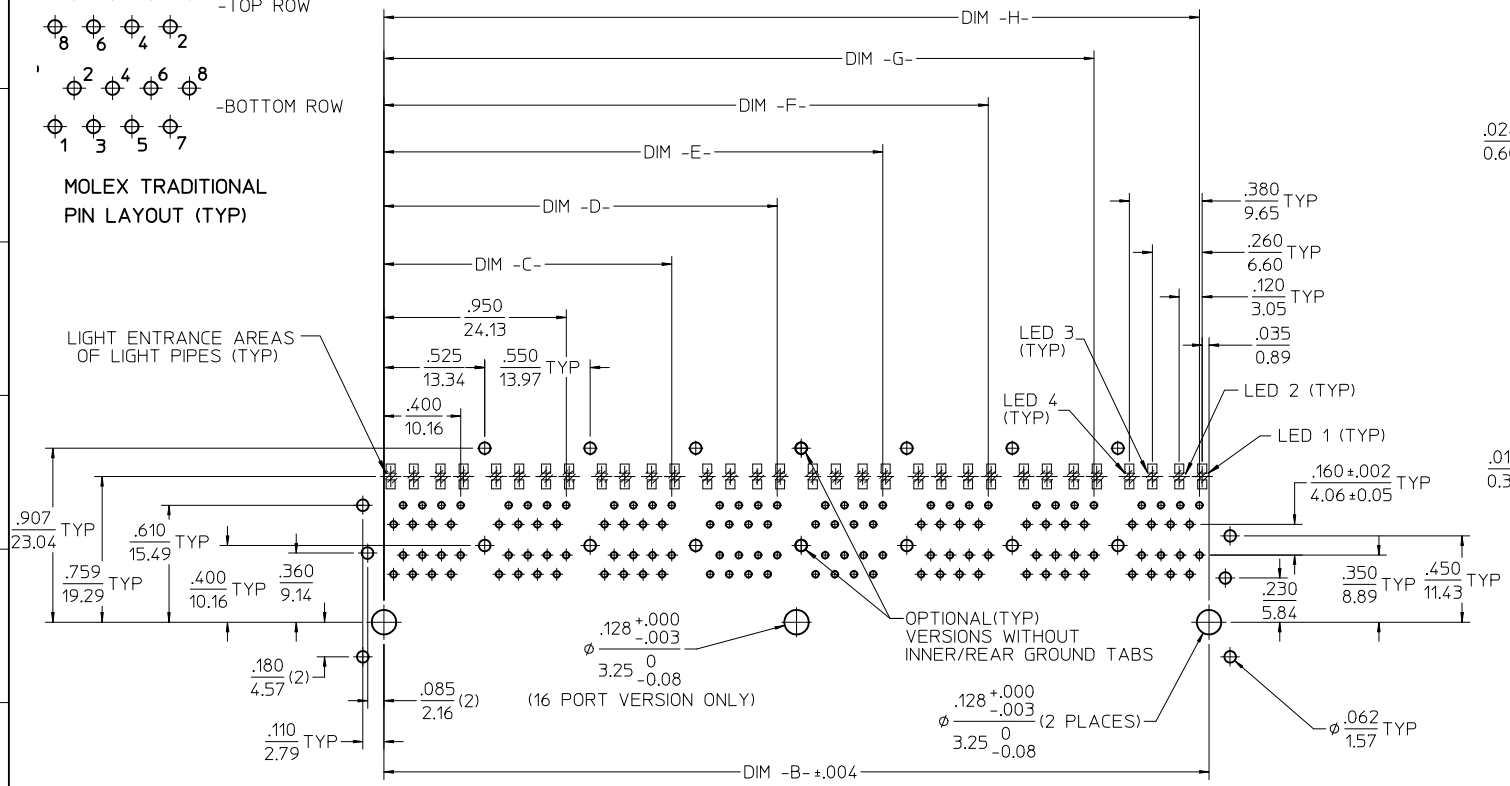

PC BOARD LAYOUT: COMPONENT SIDE
RECOMMENDED PCB THICKNESS: .062/1.57
(16 PORT VERSION SHOWN)

ALL DIMENSIONS ARE ±.003/±.08
UNLESS SPECIFIED OTHERWISE

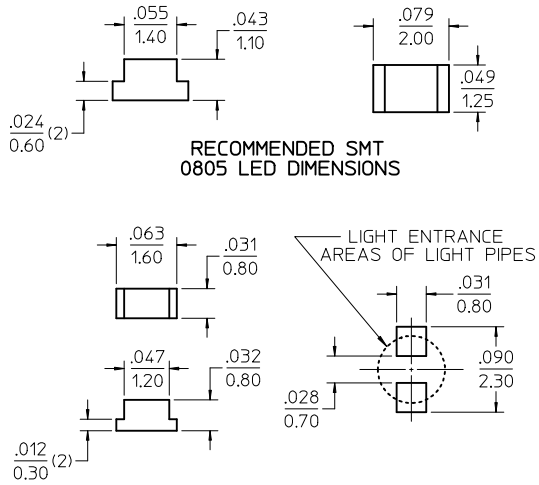

RECOMMENDED SMT
0805 LED DIMENSIONS

RECOMMENDED SMT
0603 LED DIMENSIONS

RECOMMENDED SMT LED
0603 SOLDER PATTERN

NOTES:

1. SEE MOLEX WEB SITE FOR CROSS REFERENCE OF RECOMMENDED LED'S.

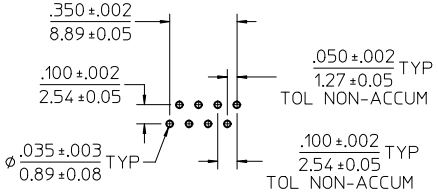

TYP HOLE LAYOUT
(EACH PORT)

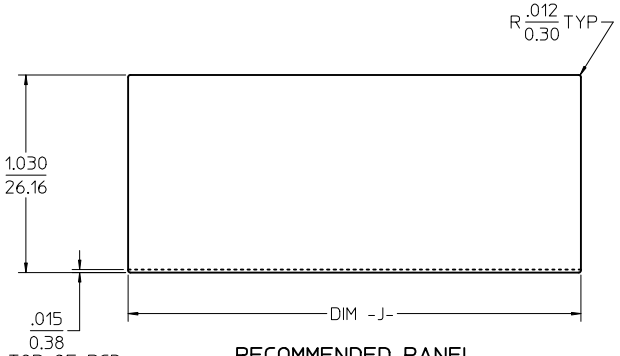

FROM TOP OF PCB
TO BOTTOM OF OPENING

RECOMMENDED PANEL
CUTOUT

NUMBER OF PORTS	DIM -B-	DIM -C-	DIM -D-	DIM -E-	DIM -F-	DIM -G-	DIM -H-	DIM -J-
8 (2 X 4)	2.100/53.34	1.500/38.10	2.050/52.07					2.360/59.94
12 (2 X 6)	3.200/81.28	1.500/38.10	2.050/52.07	2.600/66.04	3.150/80.01			3.460/87.88
16 (2 X 8)	4.300/109.22	1.500/38.10	2.050/52.07	2.600/66.04	3.150/80.01	3.700/93.98	4.250/107.95	4.560/115.82

SEE SHEET 1
EC NO: UCP2012-1217
DRWN:NNGUYEN 2011/10/18
CH'KD:JBELL 2011/10/18
APPR:FSMITH 2012/02/10
DESCRIPTION
REV

QUALITY SYMBOLS
FV =0
FE =0
FP =0

GENERAL TOLERANCES (UNLESS SPECIFIED)

	mm	INCH
4 PLACES	± ---	± ---
3 PLACES	± ---	± .010
2 PLACES	± 0.25	± ---
1 PLACE	± ---	± ---
ANGULAR ±1/2°		

DRAFT WHERE APPLICABLE MUST REMAIN WITHIN DIMENSIONS

DIMENSION STYLE: IN/MM
SCALE: 2:1
DESIGN UNITS: INCH
THIRD ANGLE PROJECTION

DRAWN BY: MARGULIS DATE: 98/11/16
CHECKED BY: ROBERTS DATE: 98/11/16
APPROVED BY: ROBERTS DATE: 98/11/16
MATERIAL NO.: SEE CHART

TITLE: STACKED MODULAR JACK WITH LIGHT PIPES CAT 5

molex MOLEX INCORPORATED

DOCUMENT NO.: SD-44170-001
SHEET NO.: 2 OF 2

SIZE: C

THIS DRAWING CONTAINS INFORMATION THAT IS PROPRIETARY TO MOLEX INCORPORATED AND SHOULD NOT BE USED WITHOUT WRITTEN PERMISSION