Ratings
Voltage: 300 V
Operating temperature: -20° to 80 °C

Conductor
Gauge: 26 AWG, 0.14 mm²
Material: tinned copper strands
Strand size: Ø 0.16 mm
Strand count: 7
Max resistance at 20 °C: 150 Ω/km

Insulator
Material: PVC
Color: white
Outer diameter: 1.3 ±0.10 mm
Min resistance at 20 °C: 10 MΩ/km

Shield
Type: spiral
Material: tinned copper strands
Strand size: Ø 0.10 mm
Strand count: 40 ±2

Outer jacket
Material: TPU, 80 °C
Type: extruded, non-integral
Color: black
Diameter: 3.2 ±0.15 mm

Wire marking: E339579 AWM STYLE 10846 80°C 300V VW-1 - - - C AWM I/II A 80°C 300V FT1 TENSILITY

Tests
Voltage test: 300 V
Spark test: 3.0 kV
Tensile strength: 1.05 kgf/mm²
After aging at 113 ±2 °C for 7 days:
Minimum tensile strength 70 % original
Minimum elongation 65 % original
Heat shock: 121 ±1 °C /1 hour, no observed degradation
Deformation: 121 ±1 °C /1 hour, ≤ 50 %
Cold bend: -10 ±1 °C /1 hour, no observed cracking
Flammability: FT2
Dielectric test: 1500 V ac for 1 minute without breakdown

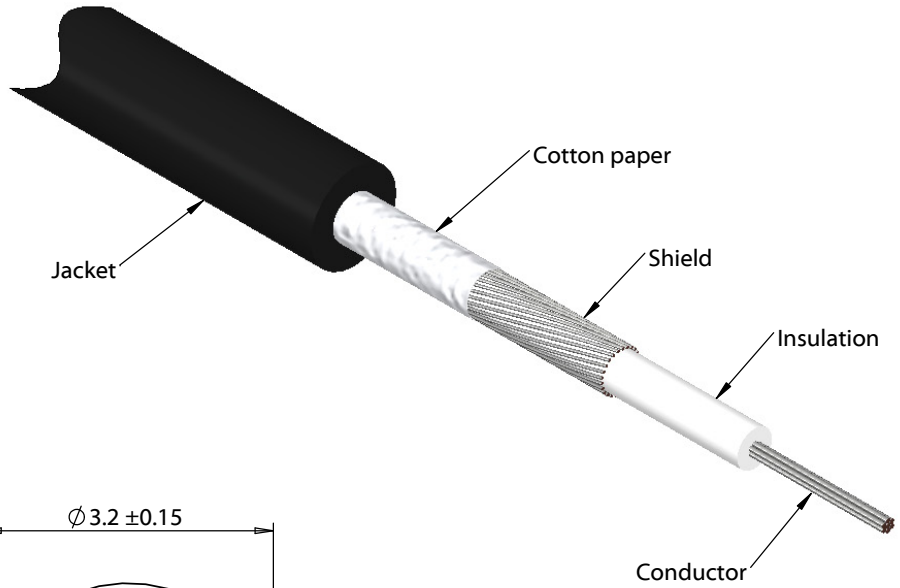

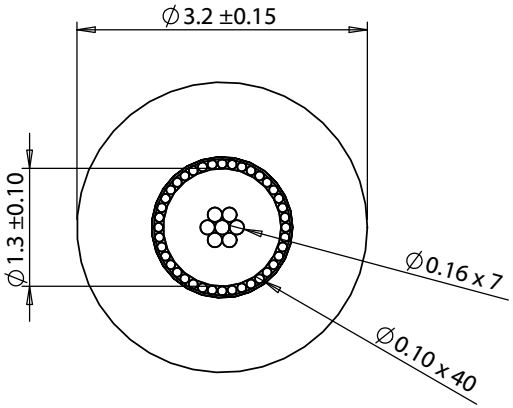

REVISION	DATE	DESCRIPTION
A	9/2/2015	Initial release
A1	9/14/2015	Upgraded fire rating to VW-1/ FT1
A2	3/10/2016	Updated operating temperature range

PREPARED: GL 2016.03.11 10:39:36 -08'00'

VERIFIED: PS Digitally signed by PS DN: cn=PS, o, ou, email=QA004@tensility.com, c=US Date: 2016.03.11 11:36:40 -08'00'

DIMENSIONS ARE IN MILLIMETERS

TOLERANCES:
X: ± 0.5 mm
X.X: ± 0.3 mm
X.XX: ± 0.05 mm

NOTES
RoHS and REACH compliant

Function test: no open, no short circuit, no intermittent

Drawing in third angle projected

DESCRIPTION:
Wire, 1C TS, 26 AWG, UL10846, 300V, 80C, 3.2 mm, shielded, VW-1, TPU

TENSILITY
20802 Sockeye Place #130
Bend, OR 97701 USA
tel 541.323.3228 *fax* 541.323.4202
800 877.670.7118 www.tensility.com

SIZE	PART NUMBER
A	30-00570

SCALE: 12:1 | SHEET 1 OF 1

5 4 3 2 1