THIS COPY IS PROVIDED ON A RESTRICTED BASIS AND IS NOT TO BE USED IN ANY WAY DETRIMENTAL TO THE INTERESTS OF PANDUIT CORP.

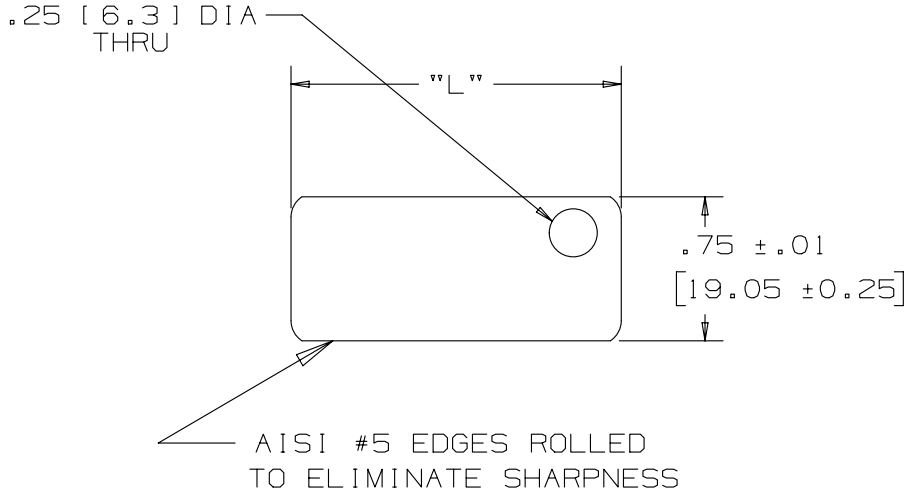

PANDUIT PART NUMBER	MATERIAL	PACKAGE QUANTITY	LENGTH = "L" ±.02
MT172-C	304 SS	100	1.72 [43]
MT172-C316	316 SS	100	1.72 [43]
MT350-C	304 SS	100	3.50 [89]
MT350-C316	316 SS	100	3.50 [89]

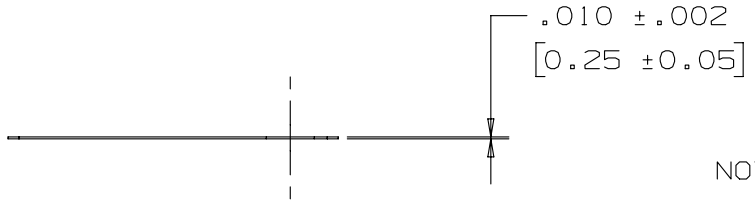

NOTES:

1. BRACKETS [ ] DENOTES DIMENSIONS IN MILLIMETERS
2. CUSTOM PERMANENT MARKING AVAILABLE CONSULT FACTORY
3. TOLERANCES:
   .XXX = ±.010 [.25]
   .XX = ±.02 [.5]
   .X = ±.03 [.8]
   ANGLES = ±2°

REV	DATE	BY	CHK	APR	DESCRIPTION	ECN
03A	3/13	JAMB	MIM	RGRO	UPDATE DRAWING TO NEW PANDUIT GLOBAL TITLE BLOCK WITH PANDUIT LOGO	SSECN01031
02	5/02	JAMB	JAC	JAC	MATERIAL FOR PART NUMBER MT172-C & MT350-C WAS 302 SS	09145
01	1/01	KMD	JAC	JAC	MT172-C316 WAS MT172-316C, MT350-C316 WAS MT-316C. CAD FILE SPEC WAS NPC_S41084_00	09062
00	11/91	SM	JAC	LA	RELEASED	00679

TITLE

METAL TAGS - 1 HOLE

CUSTOMER DRAWING

ITEM REVISION NAME: N41064BS/03

DATASET FILE NAME: N41064BS_DC/03A

PANDUIT

UNLESS OTHERWISE SPECIFIED, DIMENSIONAL TOLERANCES ARE: IN [mm]

.X ± .1 [2.54] .XXX ± .005 [.127]
.XX ± .01 [.25] ANGLES ± 5 °

THIRD ANGLE PROJECTION

MATERIAL: STAINLESS STEEL

DRAWING NUMBER: N41064BS_DC

DRAWN BY	DATE	CHK	SCALE	SHT 1 OF 1	SIZE
SAM	11/11/91	JAC	1:1		A