THIS DRAWING IS UNPUBLISHED. RELEASED FOR PUBLICATION -,- .
© COPYRIGHT 2011 BY TYCO ELECTRONICS CORPORATION. ALL RIGHTS RESERVED.

LOC	DIST
DW	—

REVISIONS

P	LTR	DESCRIPTION	DATE	DWN	APVD
	A	REVISED (ECO-11-013077)	23JUN'11	J.C.	W.K.

NOTE:
1. MATERIAL:
   HOUSING: THERMOPLASTIC (SEE TABLE), UL 94V-0,
   COLOR: (SEE TABLE).
   CONTACT: PHOSPHOR BRONZE, THICKNESS=0.25mm.
   SHELL: PHOSPHOR BRONZE, THICKNESS=0.30mm.
   BACK SHELL : STAINLESS STEEL, THICKNESS=0.30mm.
2. FINISH:
   CONTACT: GOLD FLASH OVER
   30u" MIN. PALLADIUM-NICKEL PLATED ON CONTACT AREA,
   100u" MIN. MATTE-TIN PLATED ON SOLDER TAILS,
   50u" MIN. NICKEL UNDERPLATED ALL OVER.
   SHELL: 100u" MIN. BRIGHT TIN OVER 50u" MIN. NICKEL UNDERPLATED.

3. WAVE SOLDER CAPABLE TO 265°C PER TE SPEC 109-202, CONDITION B.

4. REFLOW SOLDER CAPABLE TO 260°C PER TE SPEC 109-201, CONDITION B.

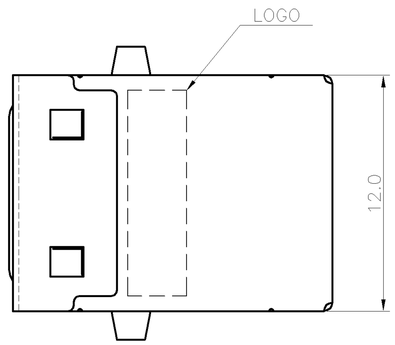

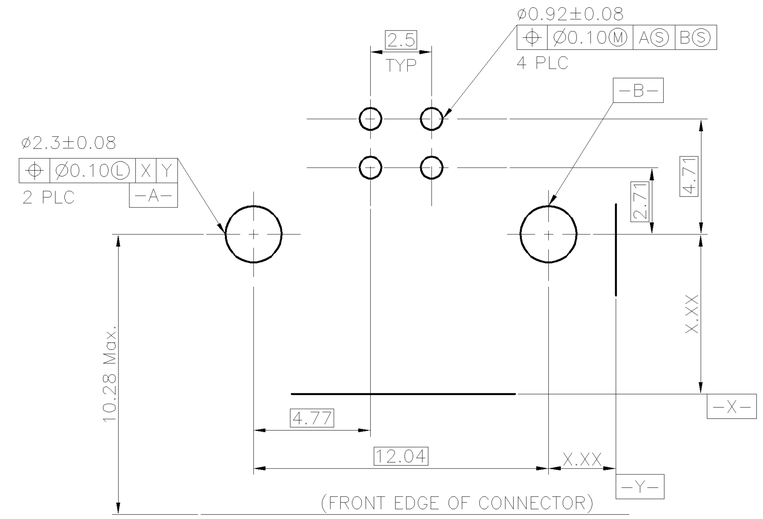

RECOMMENDED PCB LAYOUT(TOLERANCE: ±0.05)

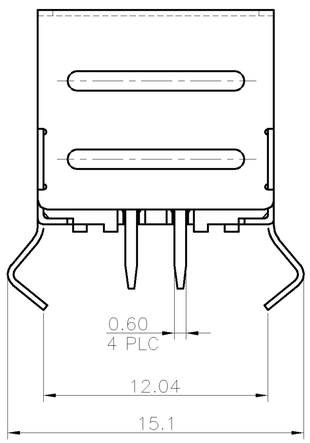

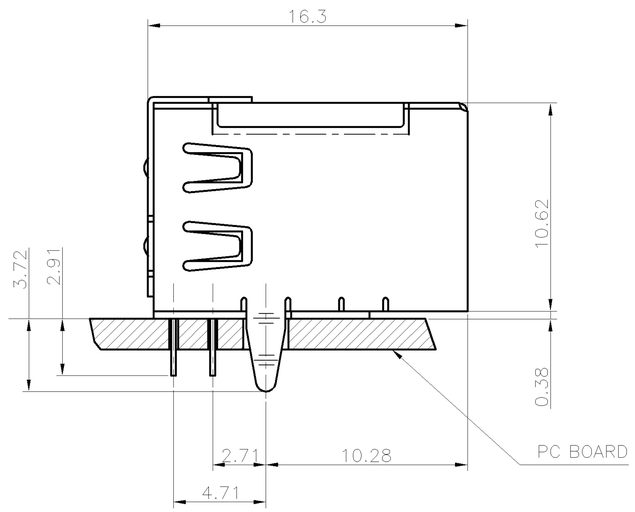

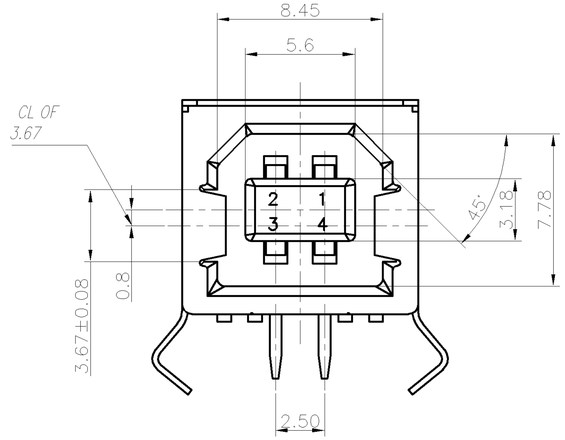

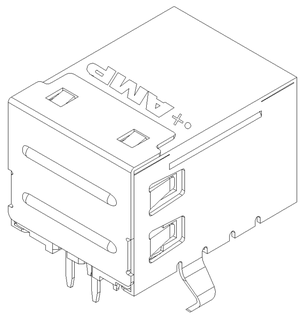

4	HIGH TEMP. THERMOPLASTIC	NATURAL	4-1734376-8
3	THERMOPLASTIC	WHITE	4-1734376-7
SOLDERING PROCESS	HOUSING MATERIAL	COLOR	PART NUMBER

THIS DRAWING IS A CONTROLLED DOCUMENT.

DIMENSIONS: mm

TOLERANCES UNLESS OTHERWISE SPECIFIED:

0 PLC	± 0.38
1 PLC	± 0.25
2 PLC	± 0.13
3 PLC	± 0.05
4 PLC	± -
ANGLES	± -

MATERIAL: SEE NOTE

FINISH: SEE NOTE

DWN	O. HU	01JUN2005
CHK	S. HOU	01JUN2005
APVD	W.J. KE	01JUN2005
PRODUCT SPEC	108-57538	
APPLICATION SPEC	—	
WEIGHT	3.89 GRAMS	

TE Connectivity

NAME: USB CONN. SERIES B, 4P, R/A, THRU HOLE, W/ BACK SHELL

SIZE	CAGE CODE	DRAWING NO	RESTRICTED TO
A3	00779	C-1734376	—

CUSTOMER DRAWING | SCALE — | SHEET 1 OF 2 | REV A

THIS DRAWING IS UNPUBLISHED. RELEASED FOR PUBLICATION -,- .
© COPYRIGHT 2011 BY TYCO ELECTRONICS CORPORATION. ALL RIGHTS RESERVED.

LOC	DIST
DW	—

REVISIONS

P	LTR	DESCRIPTION	DATE	DWN	APVD
		SEE SHEET 1.			

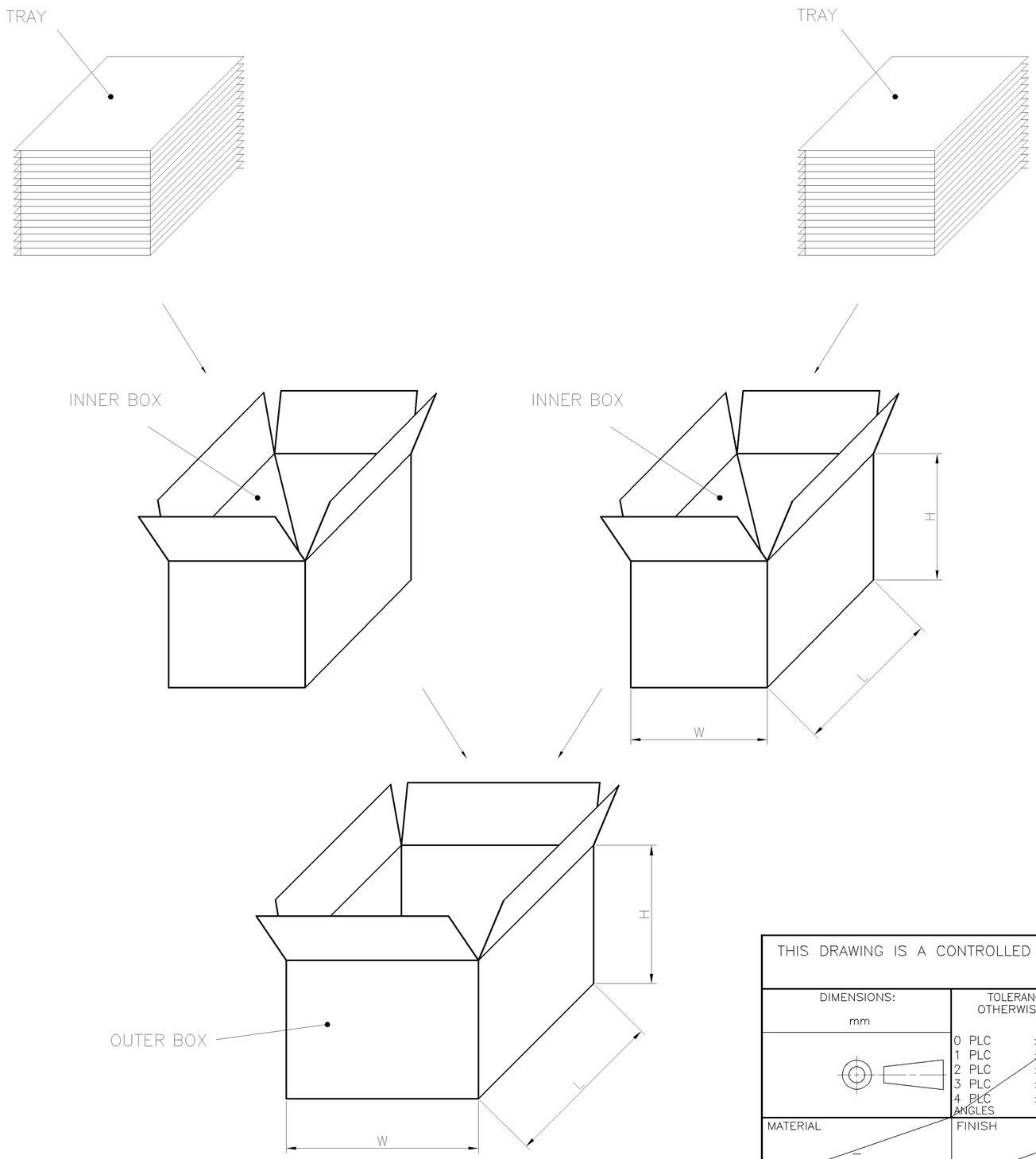

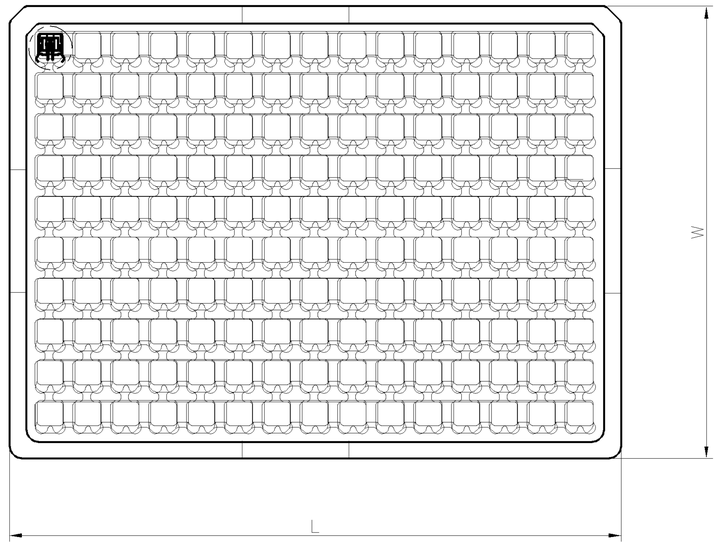

TRAY LAYOUT

NOTE:
1. MATERIAL:
   TRAY : PS.
   INNER BOX : CORRUGATED FIBERBOARD.
   SHIPPING CARTON : CORRUGATED FIBERBOARD.
2. DIMENSION:
   TRAY : L=315, W=230, H=18mm.
   INNER BOX : L=330, W=245, H=227mm.
   SHIPPING CARTON : L=509, W=345, H=248mm.
3. QUANTITY:
   PRIMARY PACKING : 150 PCS/TRAY.
   SECONDARY PACKING : 12 TRAY/CARTON(1,800PCS).
   THIRDLY PACKING : 2 INNER BOX/CARTON(3,600PCS).
4. WEIGHT:
   NET WEIGHT : 9.0kg.
   GROSS WEIGHT : 10.0kg.

THIS DRAWING IS A CONTROLLED DOCUMENT.

DIMENSIONS: mm

TOLERANCES UNLESS OTHERWISE SPECIFIED:
0 PLC ± –
1 PLC ± –
2 PLC ± –
3 PLC ± –
4 PLC ± –
ANGLES ± –

MATERIAL –
FINISH –

DWN –
CHK –
APVD –
PRODUCT SPEC –
APPLICATION SPEC –
WEIGHT –

TE Connectivity

NAME
USB CONN. SERIES B, 4P, R/A, THRU HOLE, W/ BACK SHELL

SIZE	CAGE CODE	DRAWING NO	RESTRICTED TO
A3	00779	C-1734376	—

CUSTOMER DRAWING | SCALE — | SHEET 2 OF 2 | REV A