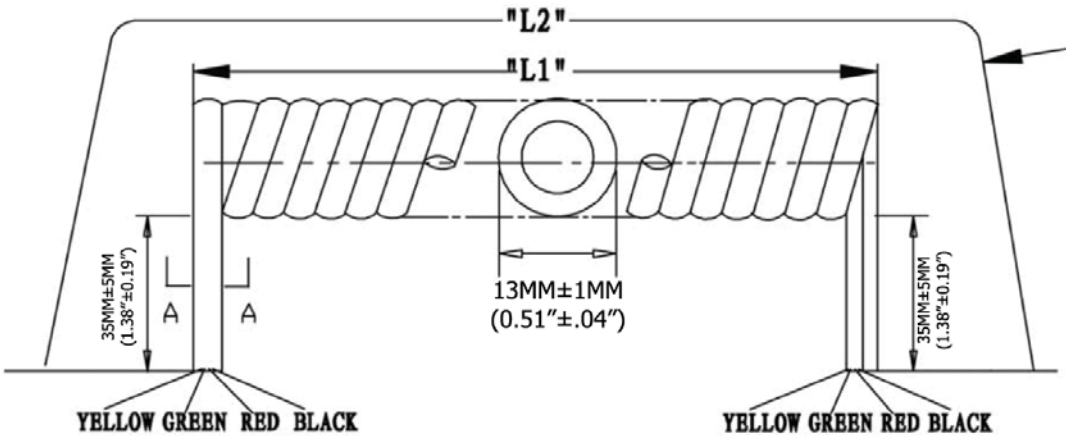

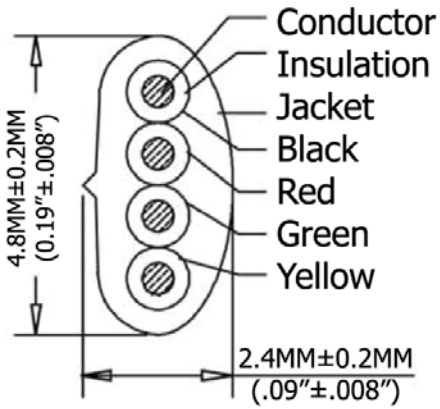

SEC:A–A

Extended Length ("L2")	Typical Retracted Length ("L1")
84.0 Inches - 96.6 Inches	18.5 Inches
2,133.6MM-2,453.64MM	469.9MM

Material:

- Conductor(X4C): 26AWG (0.12X12) Bare Copper
- Insulation(X4C):PP6331 ID 0.95-1.0
- Jacket: PVC NO UL 80P
- Package: Individual PE Bag

RoHS Complaint

Scale	1:1							Name
TOLERANCE						Drawn	11.02.11	Chappell
X.X	±0.40					Approved		
X.XX	±0.25							
X.XXX	±0.15							
Angle	±3°							
			Modification	Date	Name			

ASSMANN WSW components

Item No.
AT-K-C-26-4-B/7

Title
NON-UL 26AWG (0.16/7)*4C, O.D.: 2.4*4.8MM, Pre-Cut, 7Ft. Black

Drawing No.

rev00

Replace

Sheet