PROPERTY OF DEUTSCH D.A.O.
THIS DRAWING CONTAINS PROPRIETARY INFORMATION THAT SHALL NOT BE DISCLOSED, DUPLICATED, NOR USED IN WHOLE OR IN PART FOR ANY PURPOSE OTHER THAN TO EVALUATE THIS DRAWING.

E	92001-08-07E

REVISIONS

REV	DESCRIPTIONS	DATE	APPROVED
C	REVISED PER E.O.H4416	3/11/08	M.A.
D	REVISED PER E.O.H4432	4/25/08	M.A.
E	REVISED PER E.O.H4466	11/24/08	M.A.

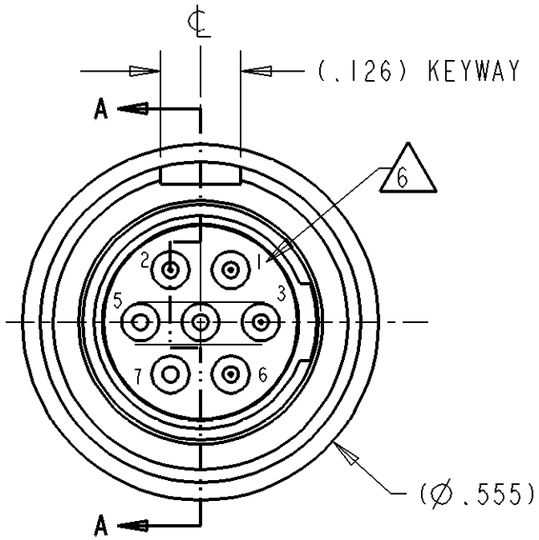

FRONT VIEW

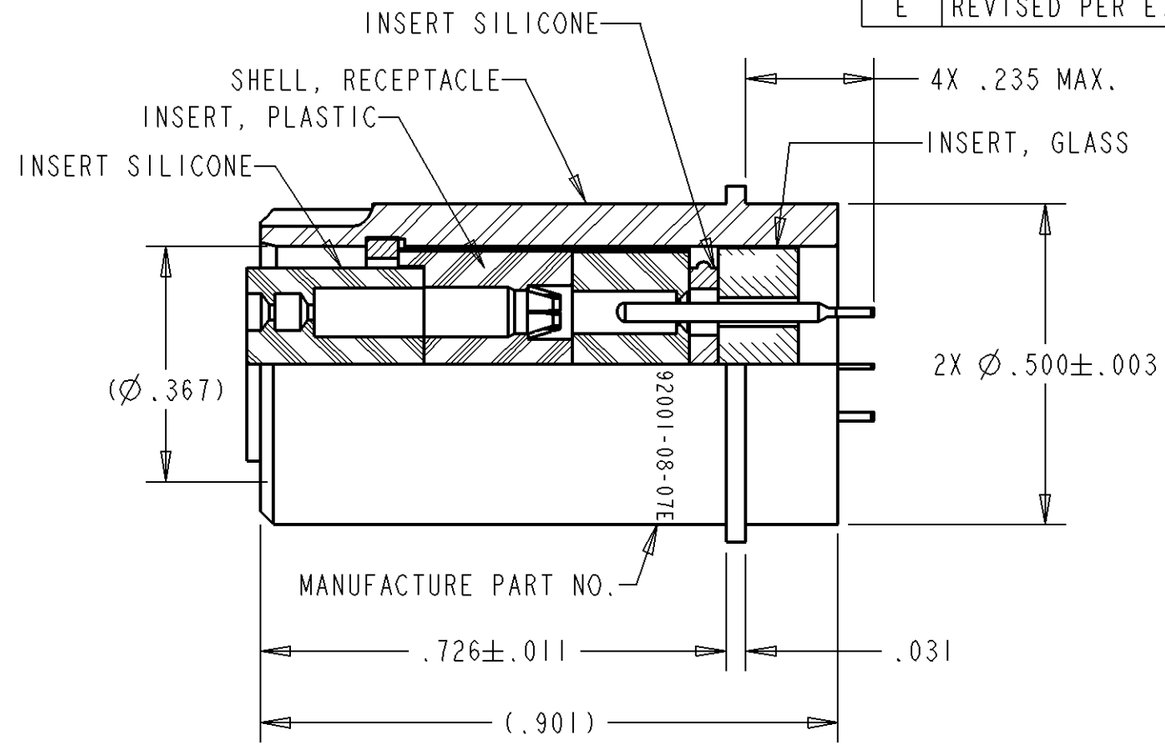

SECTION A-A

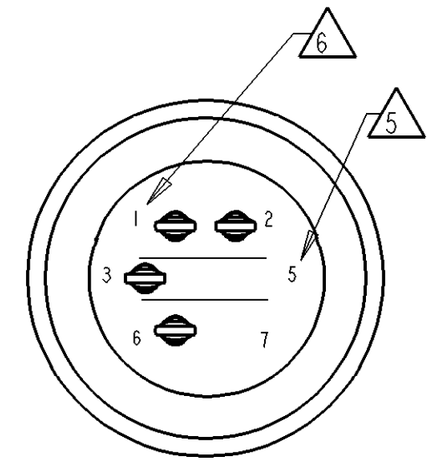

REAR VIEW

1. MATERIAL: SHELL - 304L SST
   PIN CONTACTS - HIGH NICKEL IRON ALLOY
   INSERT - HIGH COMPRESSION GLASS
   - HIGH GRADE PLASTIC
   - ELASTOMER SILICONE
2. FINISH: SHELL - ELECTRO-POLISH
   PIN CONTACTS - GOLD OVER NICKEL PLATING
3. LEAK RATE: < 1E-8 cc/sec He @ 1 atm.
4. INSULATION RESISTANCE: > 1000 MEGOHM @ 500 VDC
   DIELECTRIC WITHSTANDING VOLTAGE: NO BREAK DOWN AT 750 VAC.
5. PINS 4, 5, & 7 ARE NOT TO BE INSTALLED.
6. CAVITY IDENTIFICATION LOCATION SHOWN FOR REFERENCE ONLY. EXACT POSITION MAY VARY.
7. DIMENSIONS ARE IN INCHES UNLESS OTHERWISE NOTED.
8. STANDARD POSITION INDICATOR IS NOT PAINTED REF.
9. THE FOLLOWING ITEMS ARE NOT SUPPLIED: SOCKET CONTACTS, INSERTION/REMOVAL TOOL AND CRIMP TOOL.
10. INSERT ARRANGEMENT MUST ALIGN WITHIN ±5° OF KEYWAY ℄.

NOTE(S):

CONTACT SIZE	SOCKET CONTACT	INSERTION/ REMOVAL TOOL	CRIMP TOOL	CRIMP TOOL POSITIONER	WIRE GAUGE
22	CTS-S22/22 M39029/22-22-22	M81969/14-01	M22520/7-01	M22520/7-11	22 THRU 26

FILE:92001-08-07E-ENV

	SIGNATURE & DATE
DR	L.STOLLE 12-2-98
CHK	S.LUI 12-2-98
PE	J.AGUILERA 12-2-98
APPD	J.AGUILERA 12-2-98
SCALE:	

SHELL, RECEPTACLE
WELD MOUNT
HERMETIC
SHELL SIZE 8
SIZE 22 EYELET CONTACTS
SERIES, CTH22 TYPE
ENVELOPE

CP | MATL CODE 76

DEUTSCH
ENGINEERED INTERCONNECT SOLUTIONS
250 Eddie Jones Way
Oceanside, CA 92058

B | 92001-08-07E
DWG SIZE | CAGE CODE 11139 | SHEET 1 OF 1