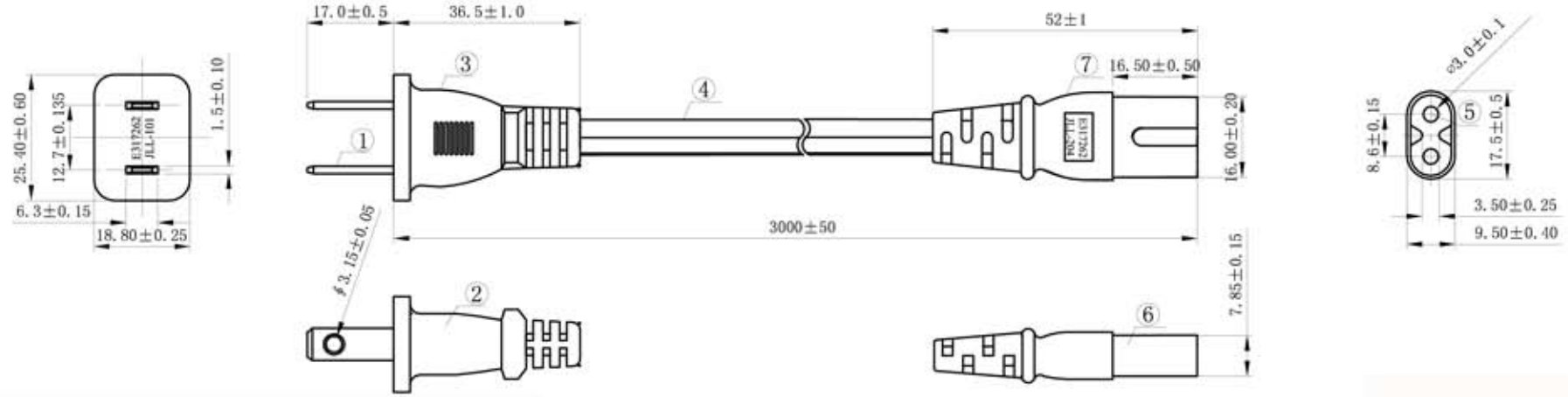

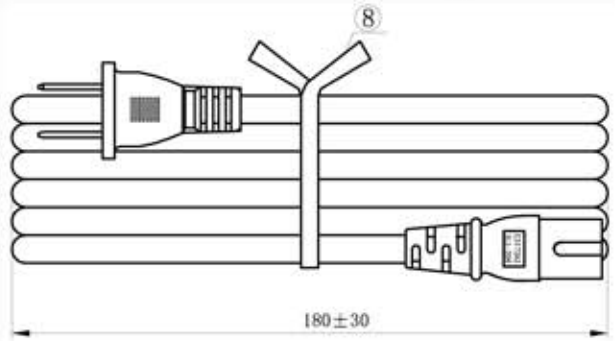

E243711 (UL) SPT-2 2×18AWG(0.824mm²) VW-1 105℃ 300V CSA 228191 SPT-2
2×18AWG(0.824mm²) FT2 105℃ 300V JINLIANLI -LF-

NO.	SPECIFICATION	COLOUR	MATERIAL	AMOUNT
①	Non-polar terminal 98661	Silver	Cu	2P
②	Model aircraft 8661AN-2P	WHITE	PBT	1PCS
③	Plug JLL-101	BLACK	PVC Cu	1PCS
④	Wire SPT-2 18AWG/2C 105℃	BLACK	PVC Cu	1PCS
⑤	terminal 98715	Silver	Cu	3P
⑥	Model aircraft 8714P	WHITE	PBT	1PCS
⑦	Couplers JLL-204	BLACK	PVC Cu	1PCS
⑧	Ties	BLACK		1PCS

TESTING:

1) 100% OPEN & SHORT TESTING
2) INSULATION RESISTANCE:100M ohm(min)
3) VOLTAGE:DC500V/1min
4) ROHS COMPLIANT

CONDUCTOR CONSTRUCTION(N/mm): 41/0.16AS

PVC JACKET AVERAGE THICKNESS: 1.14mm
OD:3.6±0.15*7.0±0.2mm

RoHS Compliant

Scale	1:1
TOLERANCE	
X.X	±0.40
X.XX	±0.25
X.XXX	±0.15
Angle	±3°

	Name	Date
Drawn	Miller	3/23/12
Approved	Warner	3/23/12

Modification | Date | Name

ASSMANN WSW components

Item No. **A-PC2201-030042-2**

Title SPT-2#18*2C 105C

Drawing No.

rev00

Replace

Sheet