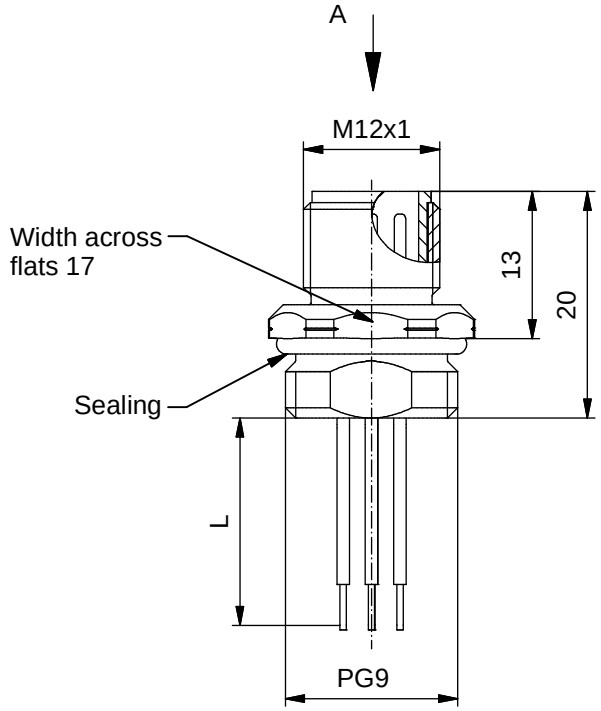

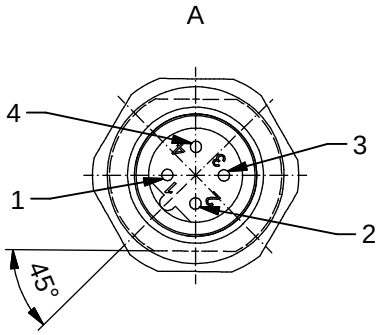

Contact assignment:

1 brown
2 Profibus-A green
3 blue
4 Profibus-B red

Technical specification:

Rated voltage: IEC 61076-2-101	250 V
Current rating: IEC 61076-2-101	4 A at 40℃
Insulation resistance: IEC 60512	>=100 MΩ
Pollution degree: IEC 60664-1	3/2
Degree of protection: IEC 60529	IP 67, in mated condition
Temperature range:	-30℃ ... +80℃
Mating cycles: IEC 60512-9a	>=100

Materials:

Contact:	CuZn
Contact plating:	Nickel, gold plated
Contact carrier:	PBT GF, UL 94
Sealing:	FPM
Socket housing:	CuZn, nickel plated
Grouting:	Polyurethane-resin, UL 94

Installation specification:

recommended torque:	1-1,2 Nm
Conec installation tool:	Torque wrench: 36-000200 Insert across flats 17: 36-000230

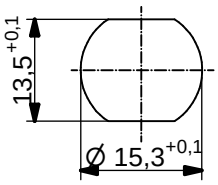

Minimum wall thickness 1,5mm, alternativ panel cut-out d=15,3

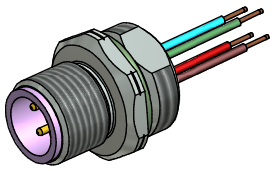

Part no:	Description:	Pos	Length L:	Litze:
43-01110	SAL - 12B - FS4.3 - 0,5 - 9	4	0,5m	AWG 22 PVC, UL
43-xxxxx	SAL - 12B - FS4.3 - ... - 9	4	x	

DO NOT ALTER CAD DRAWING BY HAND

Directive 2002/95/EC RoHS compliant

Index: d 12.02.13 MG Ä4631
Data sheet revised, technical specification changed, materials corrected

tolerance of wire: L <= 0,5m: L + 20mm; L > 0,5m: L + 4%

general tolerance: 0 ± 0,50mm; 0,0 ± 0,25mm; 0,00 ± 0,10mm

THIS DRAWING MAY NOT BE COPIED OR REPRODUCED IN ANY WAY, AND MAY NOT BE PASSED ON TO A THIRD PARTY WITHOUT WRITTEN PERMISSION. OWNERSHIP AND COPYRIGHT OF CONEC GmbH

dim. in mm

	date	name
drawn	01.03.07	Fromm
appd.	01.03.07	Mankopf

title: Male socket M12x1 with wire, frontmounting, Profibus DP, PG9

dwg no: 43K1A354

part no: see table