Alle Rechte vorbehalten/ *All rights reserved*

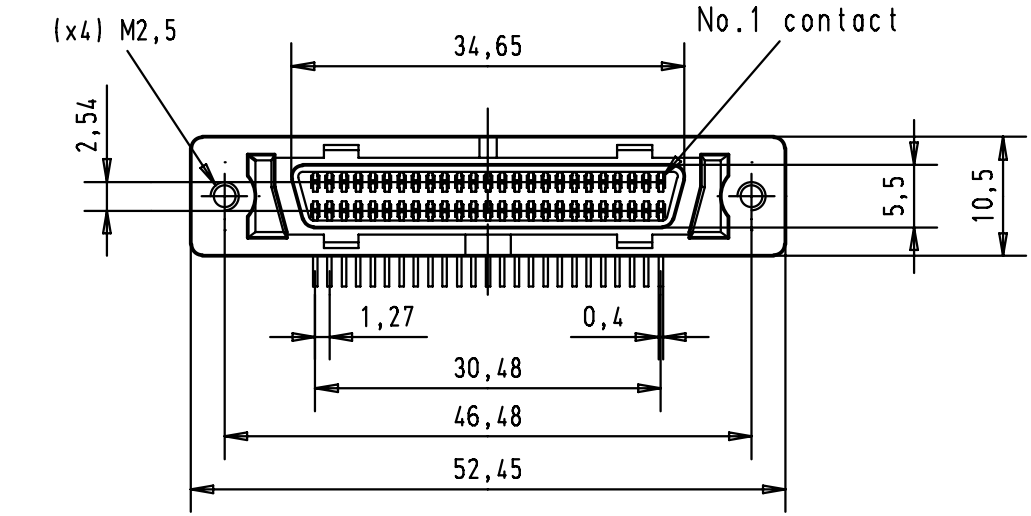

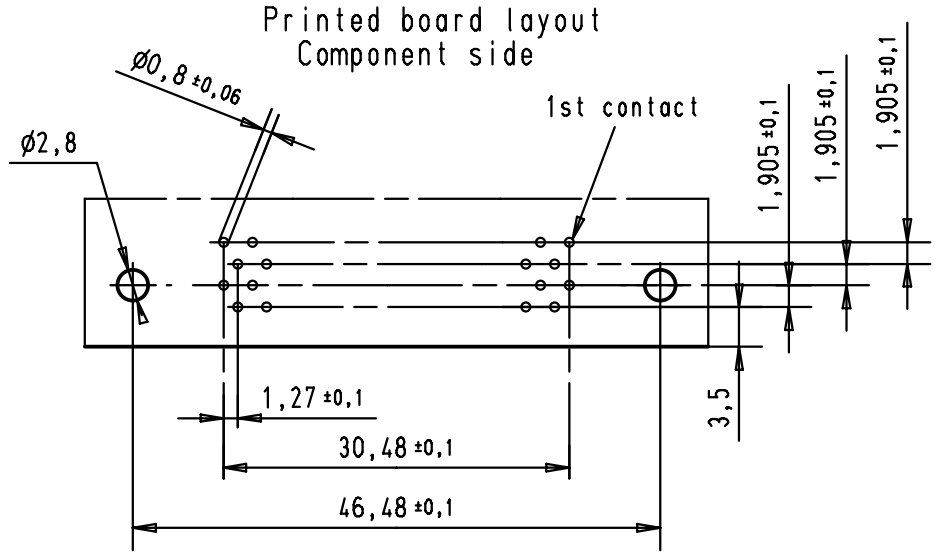

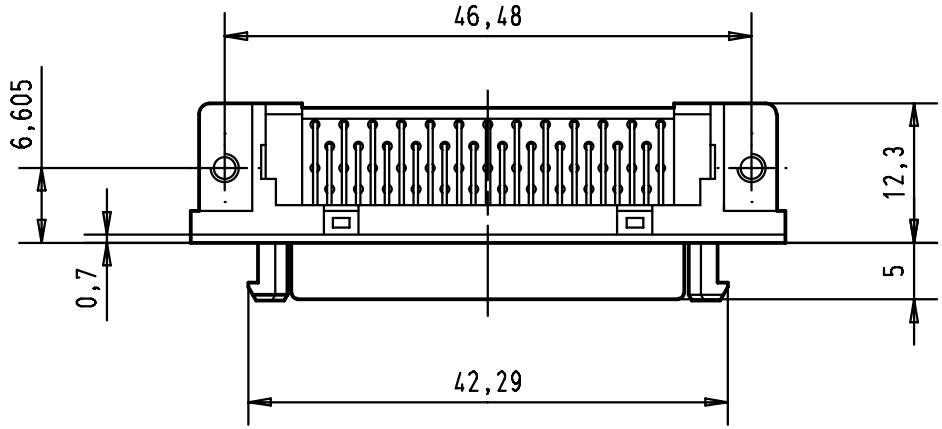

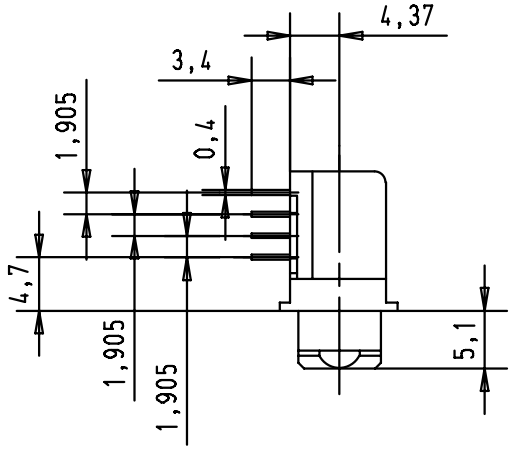

				Dat.	Name
			Detail.	30-AUG-00	JB
			Insp.		
			Stand.		
27941	30-AUG-00	JB			
Mod.	Dat.	Name			

All Dim. in mm
Orig. Size DIN A 4

HARTING EURL
F-95972 Paris

har.mik® I/O pin/socket
Female connector 50 poles
with angled solder pins
and fixed latching

TB 60 01 050 5132

Sub.

Maßstab/ *Scale* 1,5:1

Blatt/ *Page* 1/1